Fort Carson Combat Aviation Brigade

Central Energy Plant & NetZero Energy Study

"Best Hometown in the Army
Home of America's Best"

Joe Wyka Engineer Chief
Fort Carson, CO
Dr. Richard Liesen, ERDC-CERL
Dale Herron, ERDC-CERL

Fort Carson Central Energy Plant

Development on Plateau in line with Fort Carson's Sustainability Program (Seven '25 year goals')

- Energy & Water
- Transportation
- Air
  - Hazardous Air Pollutants
  - Greenhouse Gases
- Sustainable Development
  - Land Use/Master Planning
  - High Performance Buildings
  - Storm water
- Zero Waste
- Procurement
- Training Lands

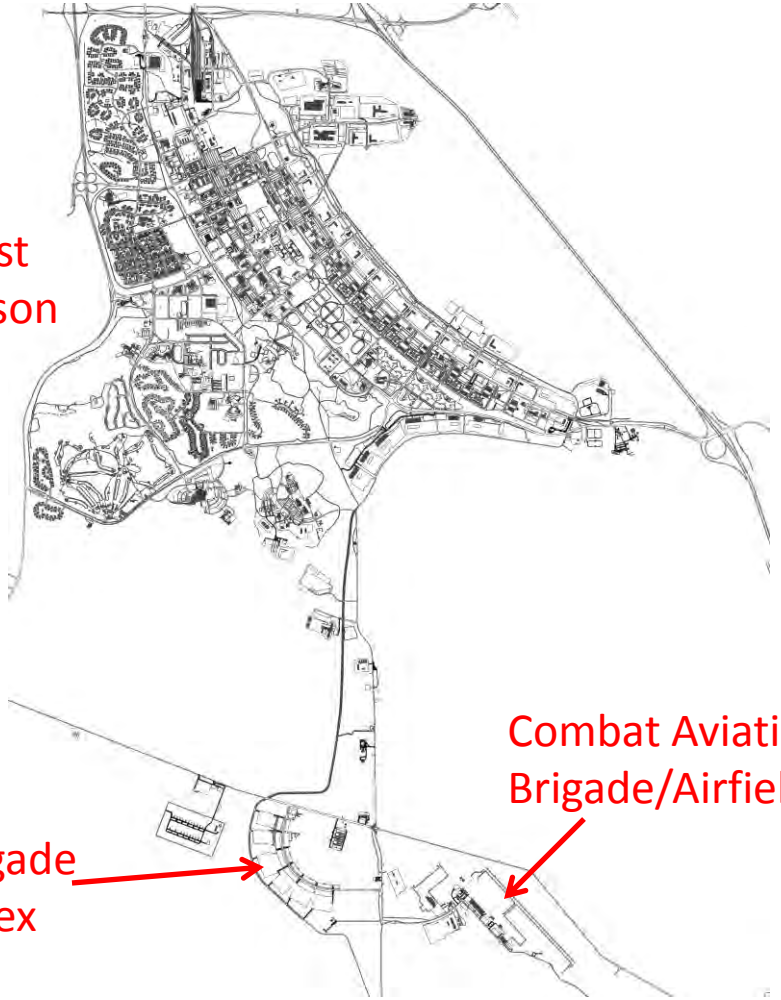

Fort Carson Central Energy Plant

SUSTAINABLE FORT CARSON
RIGHT ACTIONS. RIGHT NOW!

IMCOM
SOLDIERS • FAMILIES • CIVILIANS

Vision:

- Plan, design, construct, and operate a Net Zero Energy community to encompass the entire Butts Airfield plateau.

Objectives:

- All new vertical construction to be Net Zero Ready
- Provide a Central Energy Production Plant and Distribution System to increase energy efficiency with electricity generation across the community, as well as other appropriate renewable generation systems (e.g. geothermal, wind, PV)
- Maximize energy efficiency of existing buildings.
- Develop a sustainable community culture

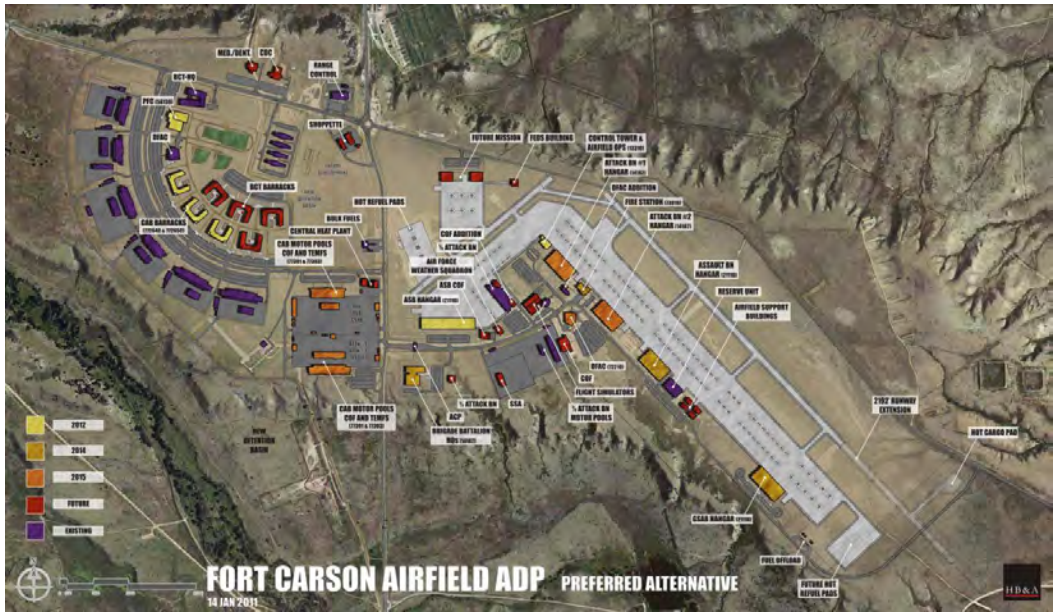

Project Team

- USACE Engineer Research and Development Center ERDC/CERL, Champaign, IL
- GEF Ingenieur AG, Leimen (Germany)
- TKDA, St Paul, MN
- USACE, Omaha District, Omaha, NE
- Fort Carson, DPW, Colorado Springs, CO

NZI-E Optimization Process

1
Setup
Site
Data

- Building
- Geography
- Utilities
- Cost Data
- Water

Facility Simulation

2
Optimize
Building
Energy
Efficiency
Measures
(EEMS)

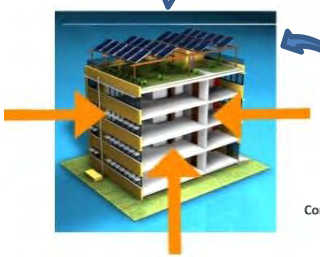

Iterate over
Building EEMS

Installation Simulation

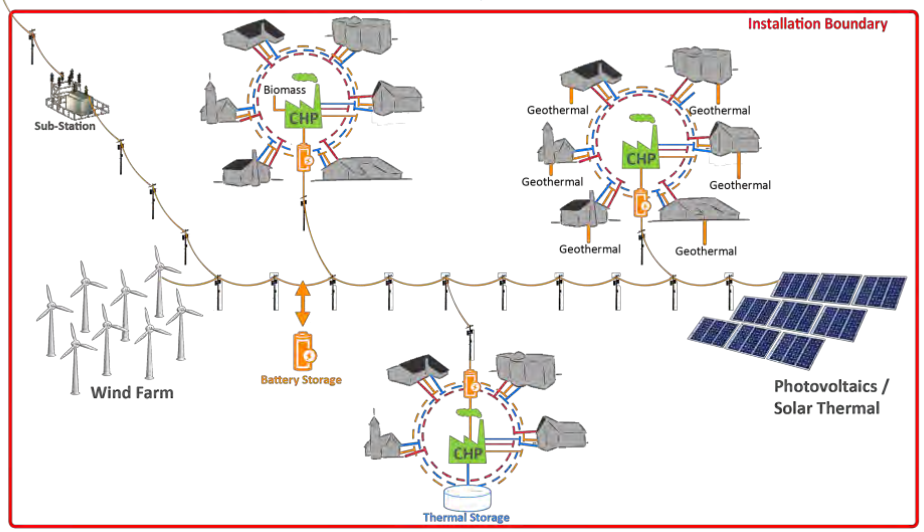

3
Optimize
District/Cluster
Solutions

4
Support Net Zero Planning
with Justification
& Documentation

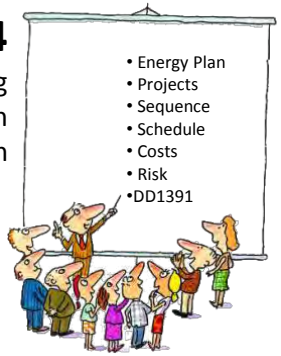

Cost-Optimizing Zero Energy Buildings

Integrating EEM's that are Net Zero Ready Cost Effective

- Debate over whether to conserve energy or generate it
- Need the lowest cost path to a building configuration which uses net-zero energy
- Point 4 is the Crossover Point: where generating renewable energy is more cost-effective than additional Energy Efficiency Measures or **Net-Zero Ready. Point 4 is normally at 60% to 80% savings depending on building and location**

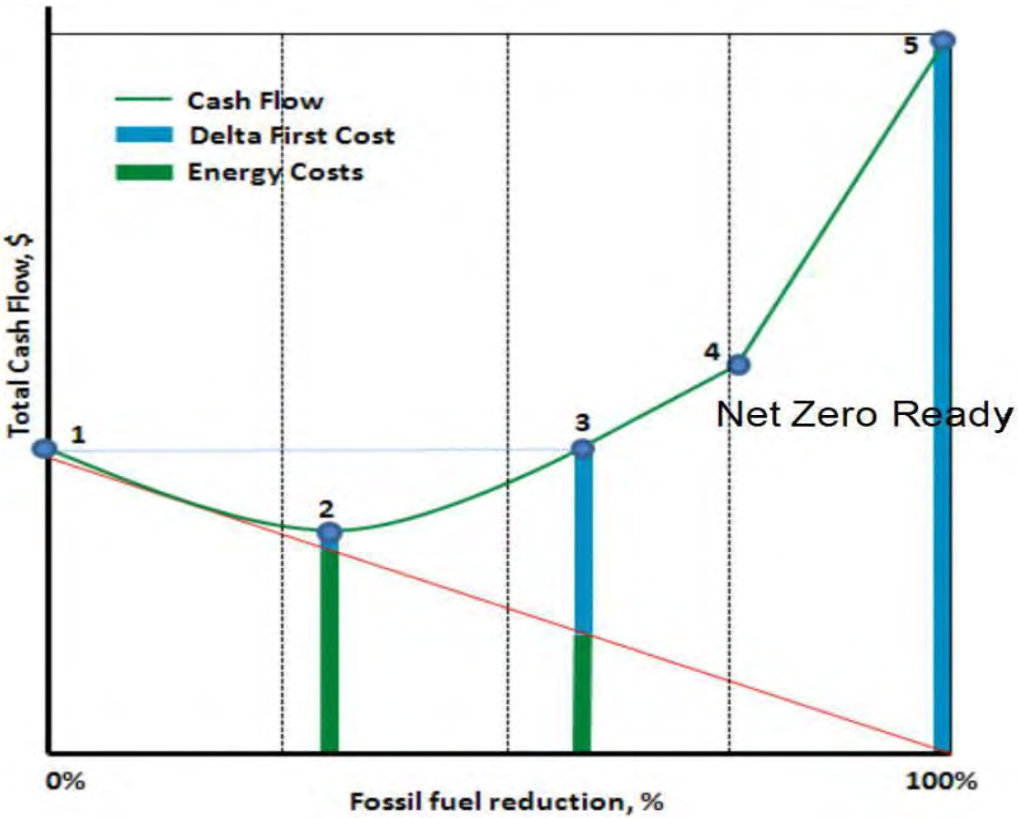

Building Simulation Process

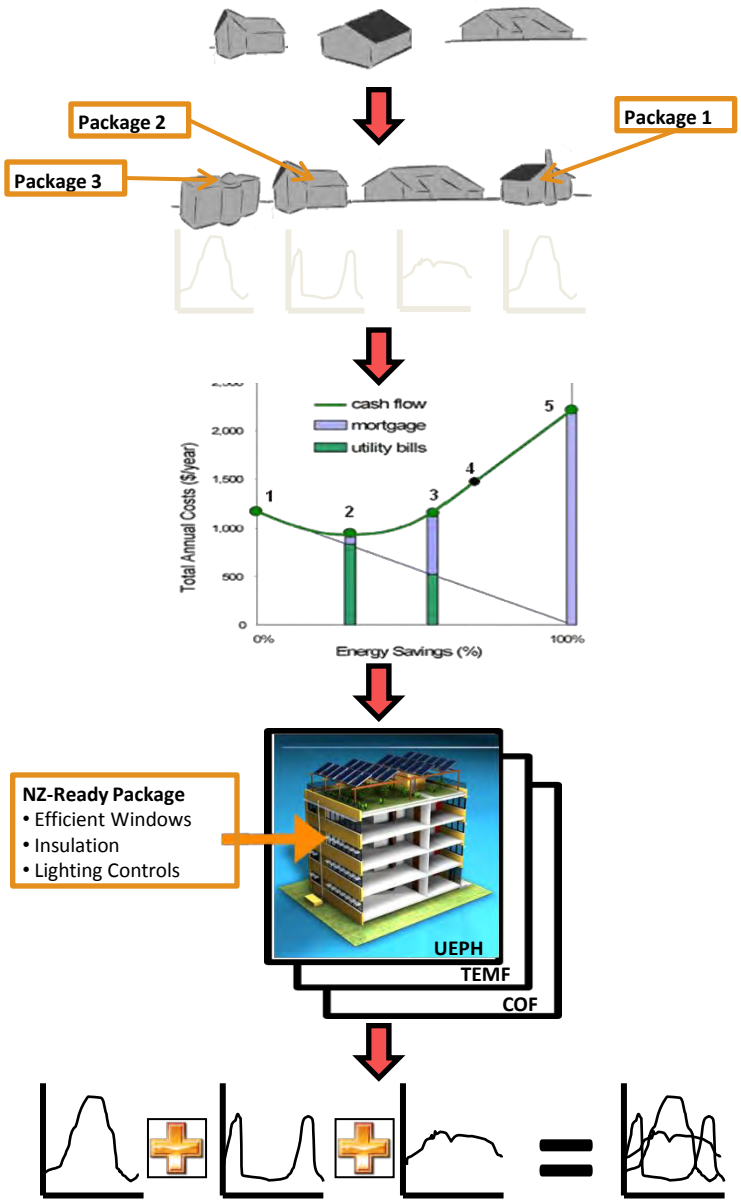

1. Gather baseline information
2. Simulate baseline and EEM packages
3. Generate Cost/Energy curve and SIR for EEM packages
4. Select optimal EEM package for each building type
5. Initial building analysis complete. Prepare load profiles to pass to next phase for cluster analysis

Installation Optimization Process

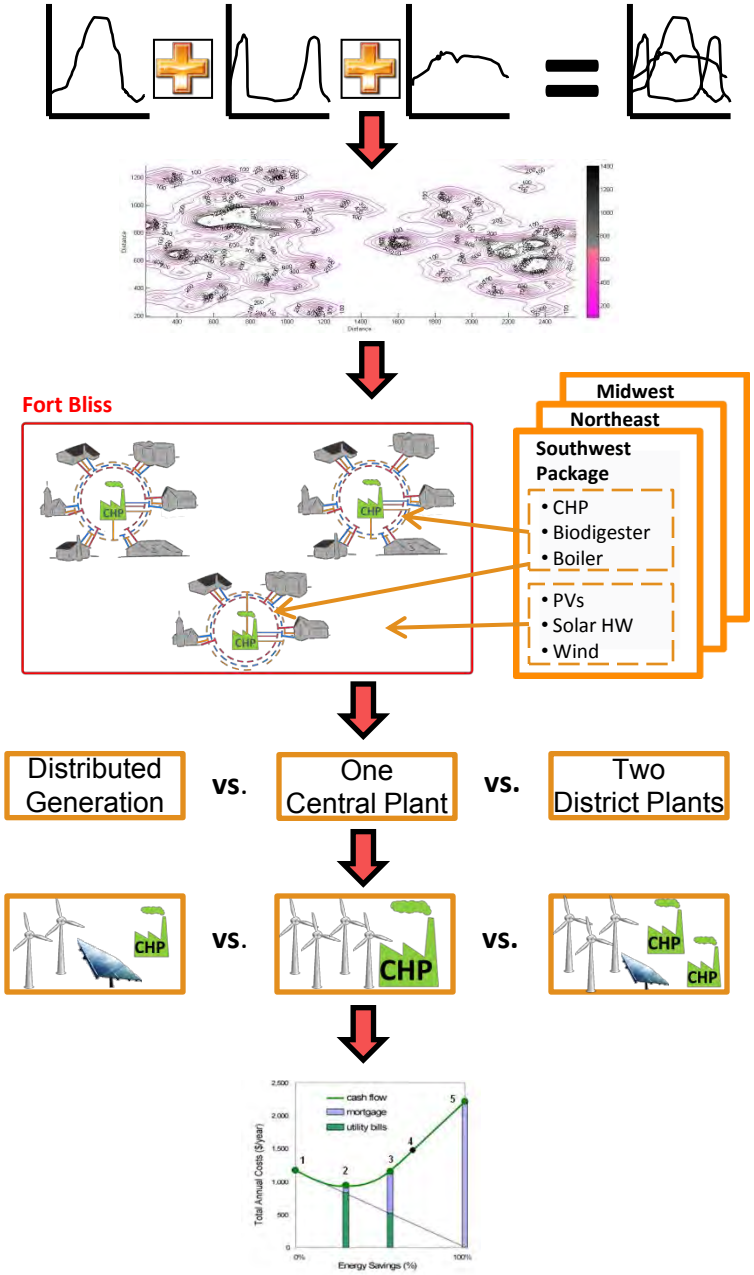

1. Integrate all building energy demands
2. Use energy density to identify possible clusters
3. Determine potential cluster equipment packages for installations and region
4. Generate alternative equipment configurations, including centralized and decentralized options
5. Optimize equipment size and pipe sizes
   - Electric, thermal, hydraulic, economic simulations
6. Calculate $SIR_{cluster}$ & EEMs

Electricity Generation & Use in USA
Buildings are ~71% of total

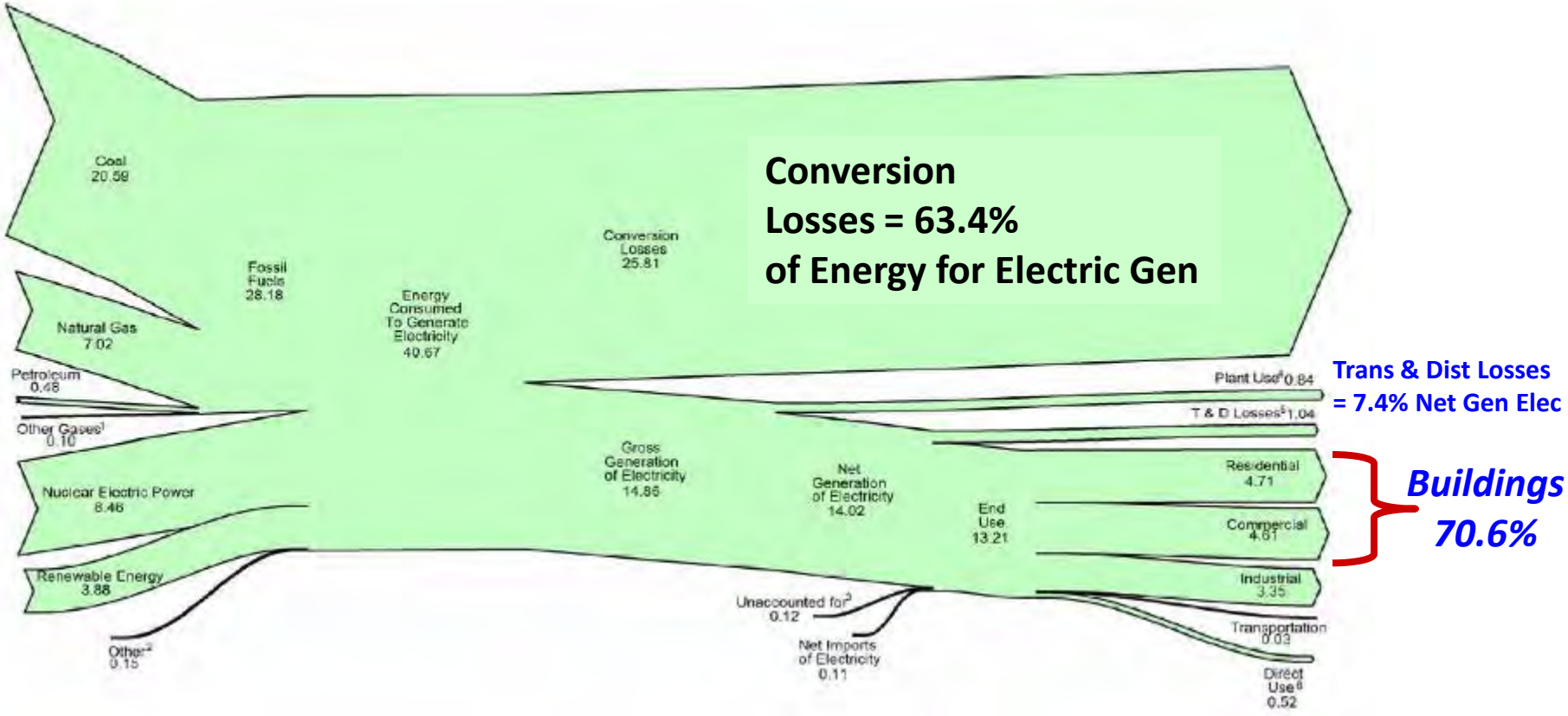

Source: US DoE EIA 2008

Building Cluster Fossil Fuel Optimization Process

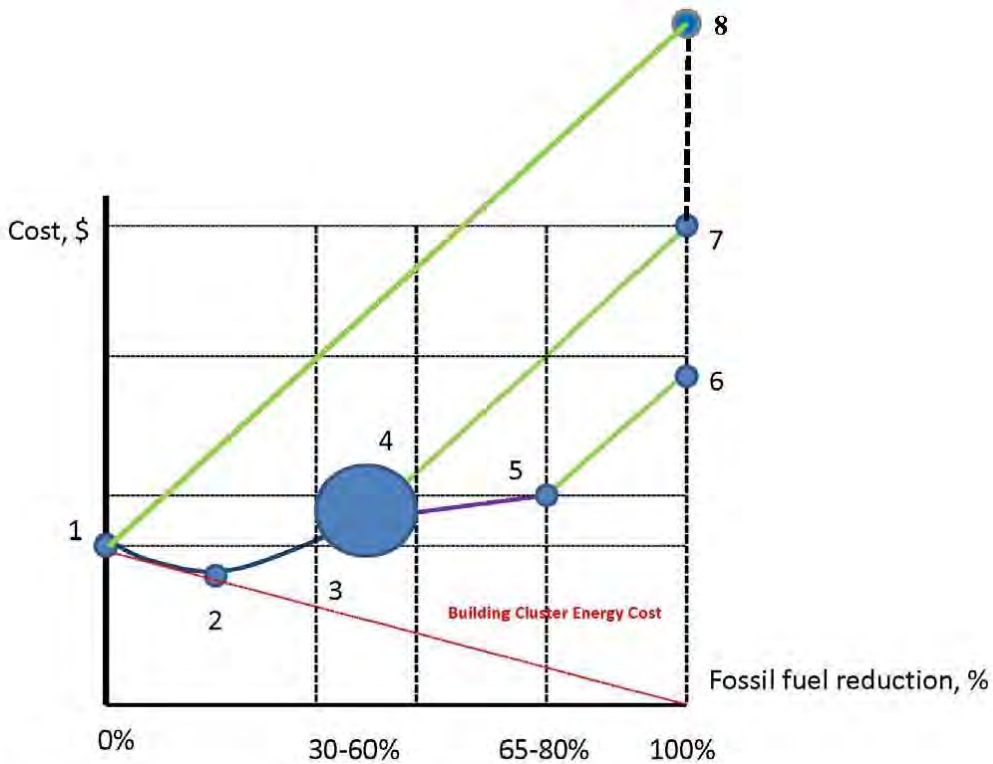

1 – Building prior to retrofit
2 - Building after retrofit with Business As Usual (BAU)
3 - Building after retrofit option to maintain the same annualized cost
4 - Building after maximum building site energy reduction retrofit
4-5 Building fossil fuel reduction due to Central Energy Plant (CEP) with co-generation
6 - NZE building connected to CEP with co-generation and a renewable energy source
7 - NZE building connected to a renewable energy source
8 - Building prior to retrofit connected to a renewable energy source

Installation Cumulative Energy Demand for CAB from EnergyPlus Simulations

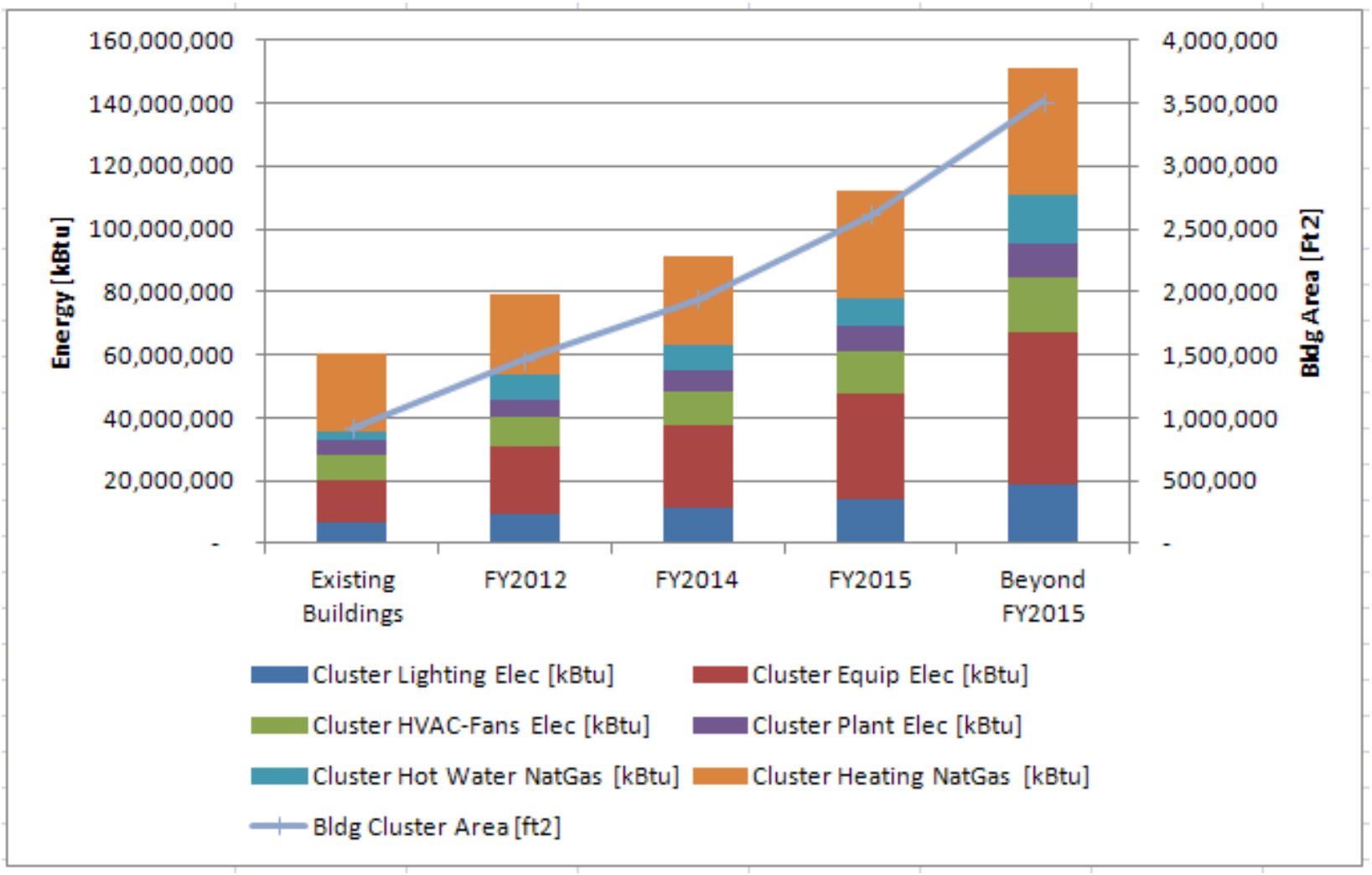

Building Cluster Energy Use Intensity

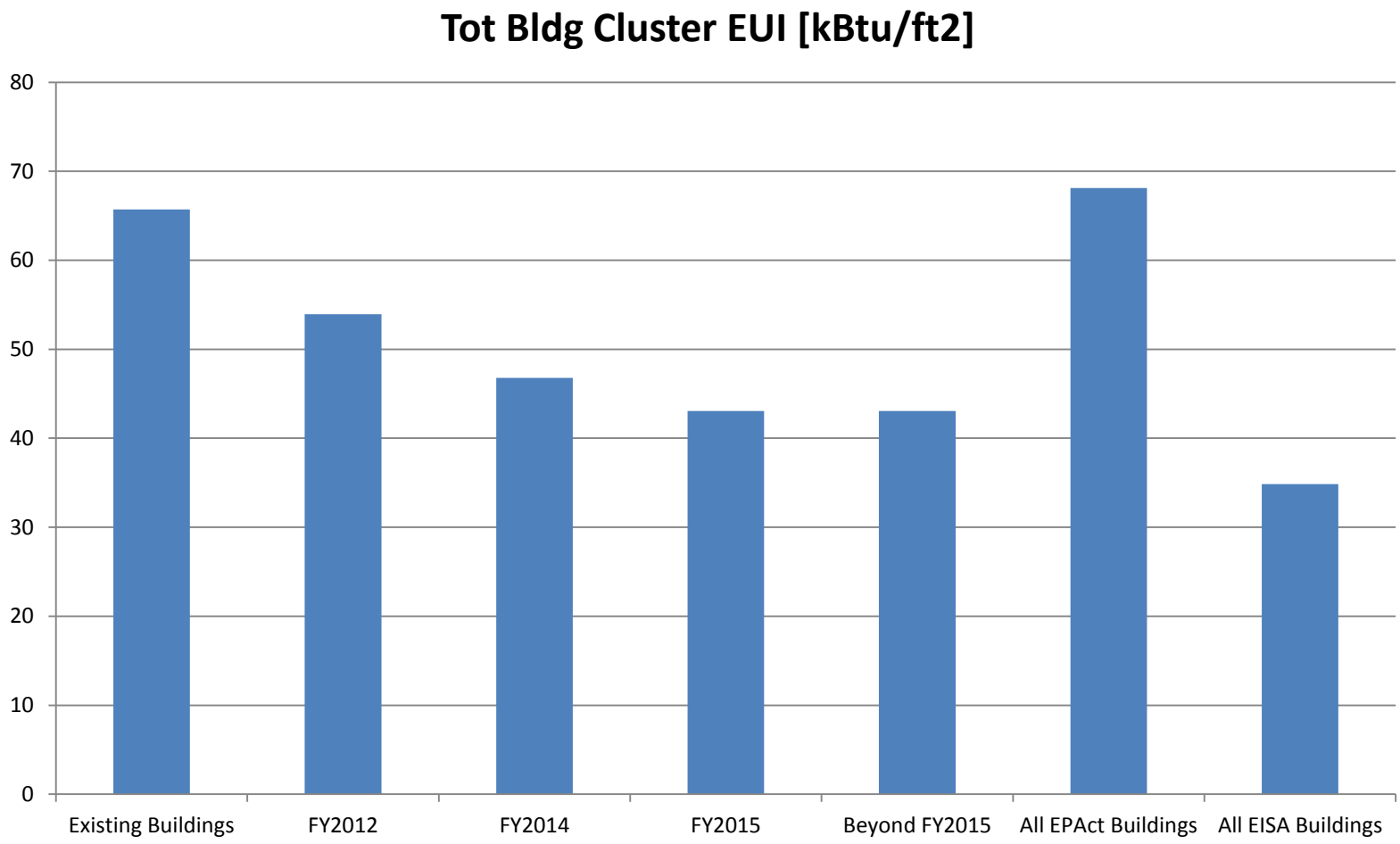

Installation Peak Demand During CAB Build Out

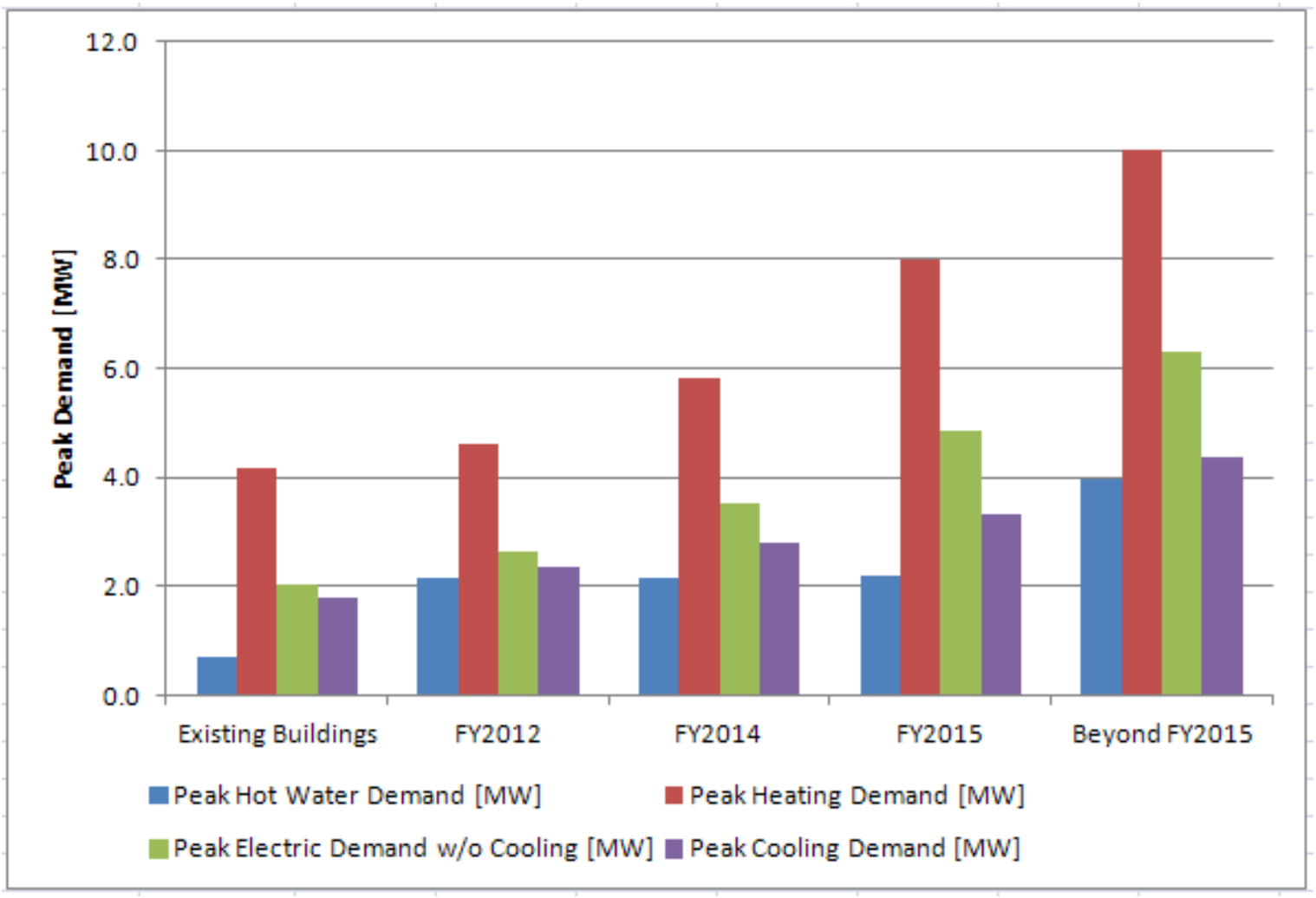

Reducing Peak and Total Load

Duration Curves shows difference between BAU and high performance buildings

All buildings built to EPAct

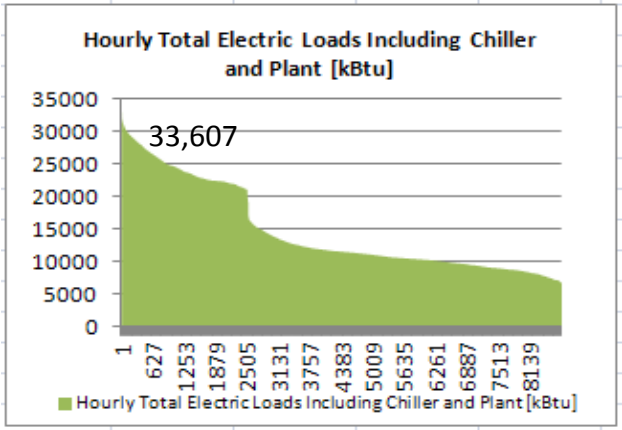

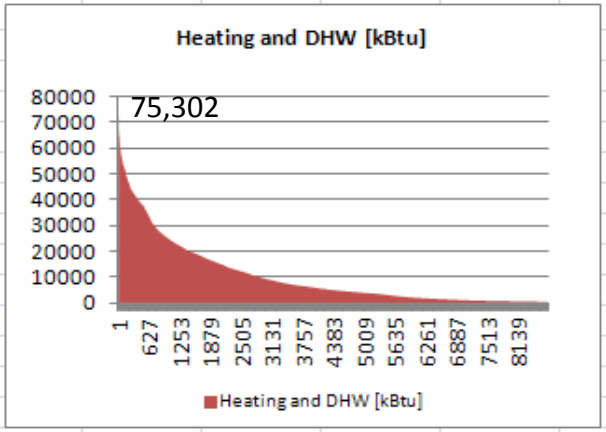

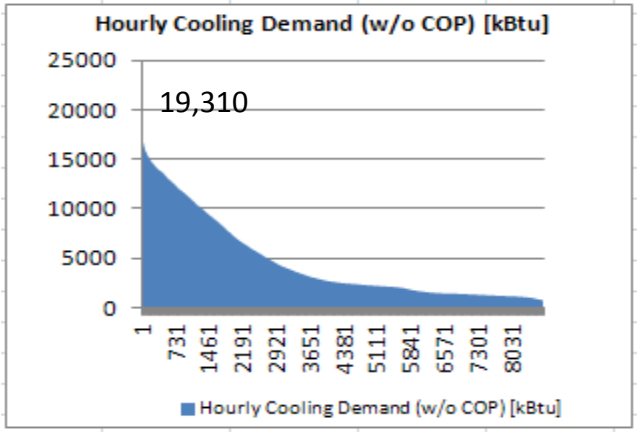

All "new" buildings built to EISA

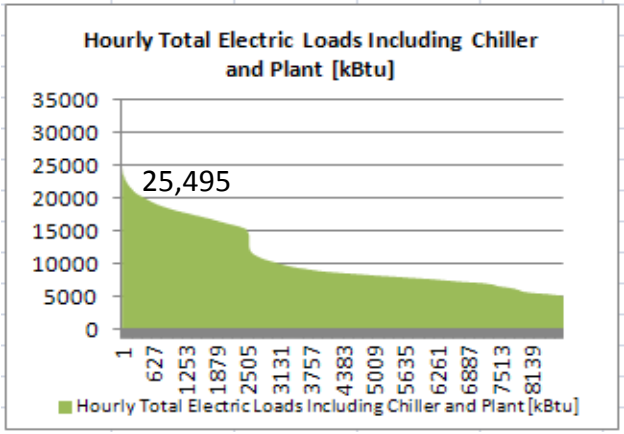

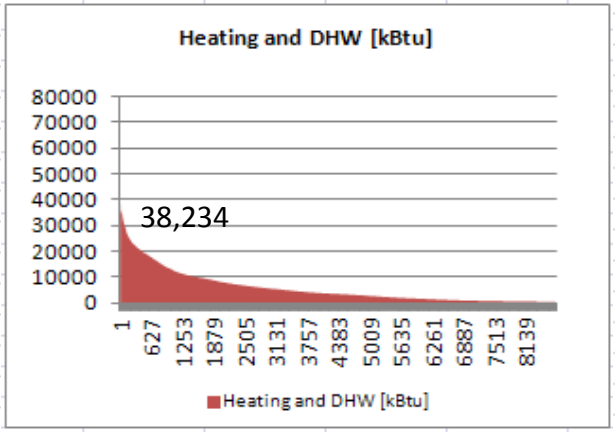

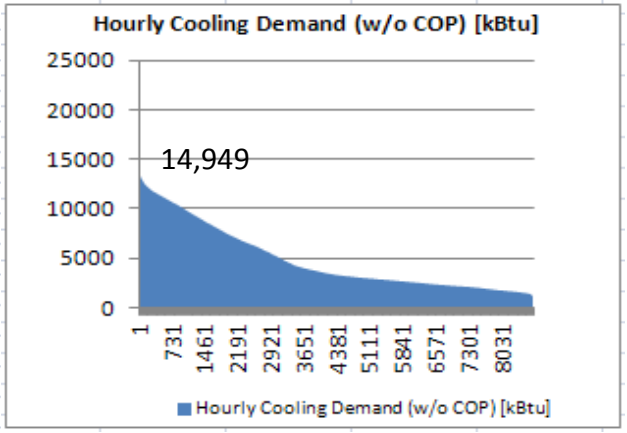

Loads for Central Energy Plant Analysis

SI	Peak Load [MW]	Total Demand [MWhr]
Electricity w/o cooling	6.3 MW_{el}	24,720 MWh_{el}
Cooling	4.4 MW_{cool}	12,500 MWh_{cool}
Heating	10.0 MW_{th}	10,420 MWh_{th}
DHW	3.9 MW_{th}	3,980 MWh_{th}
IP	Peak Load [kBtu/hr]	Total Demand [kBtu]
Electricity w/o cooling	21,516	84,348,150
Cooling	15,027	42,651,775
Heating	34,152	35,554,520
DHW	13,319	13,580,325

Alternatives for CEP generation equipment

1. 1 gas turbine plus natural gas boiler(s) for peak load

2. 2 internal combustion engines plus natural gas boiler(s) for peak load

3 Wood chip boiler with steam turbine sized to meet Total CAB electrical demand

4. Wood chip boiler with steam turbine sized to meet peak CAB heating load with a back up bio-diesel generator

Alternative # 1: Gas Turbine

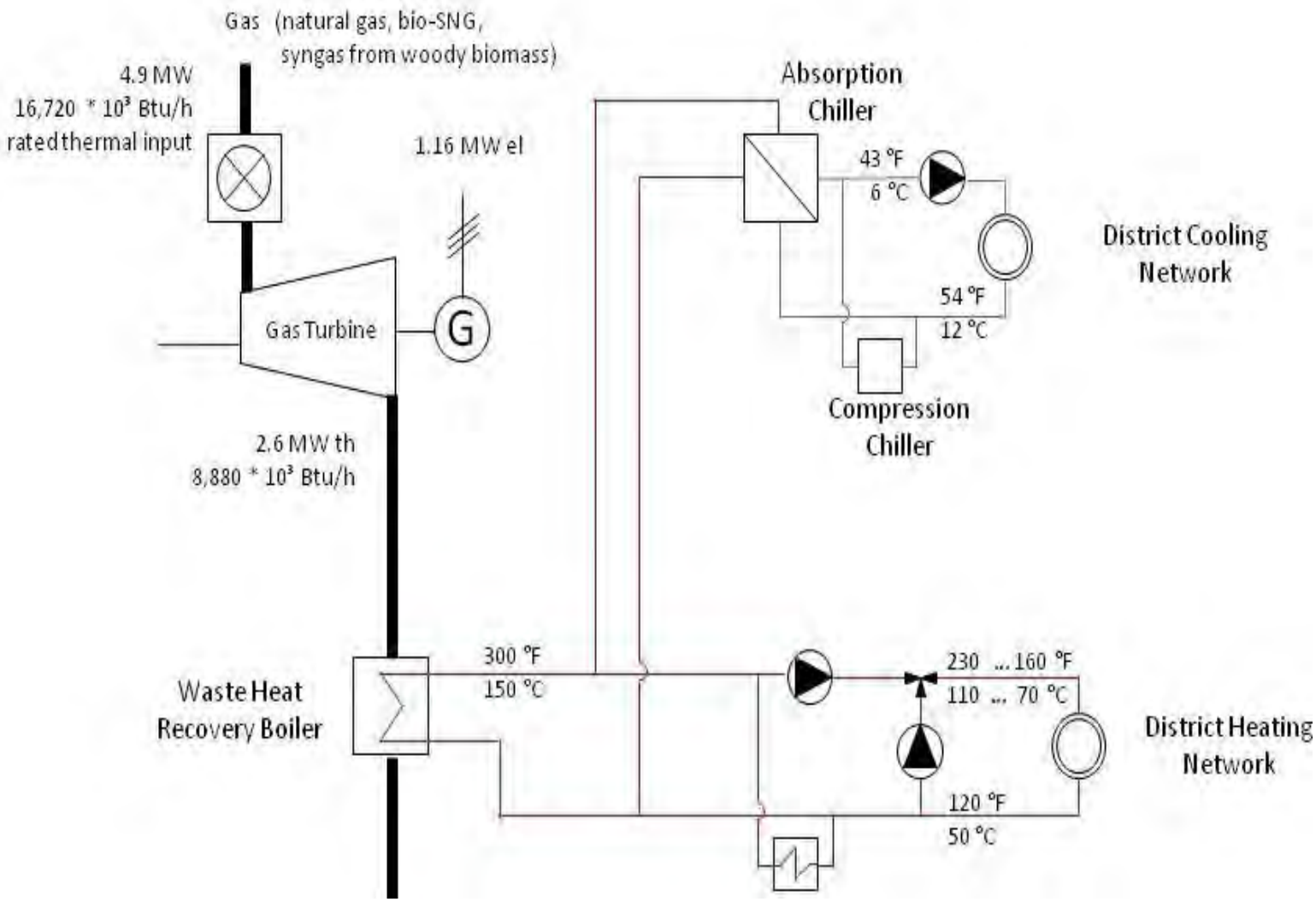

Alternative # 2: CHP engines

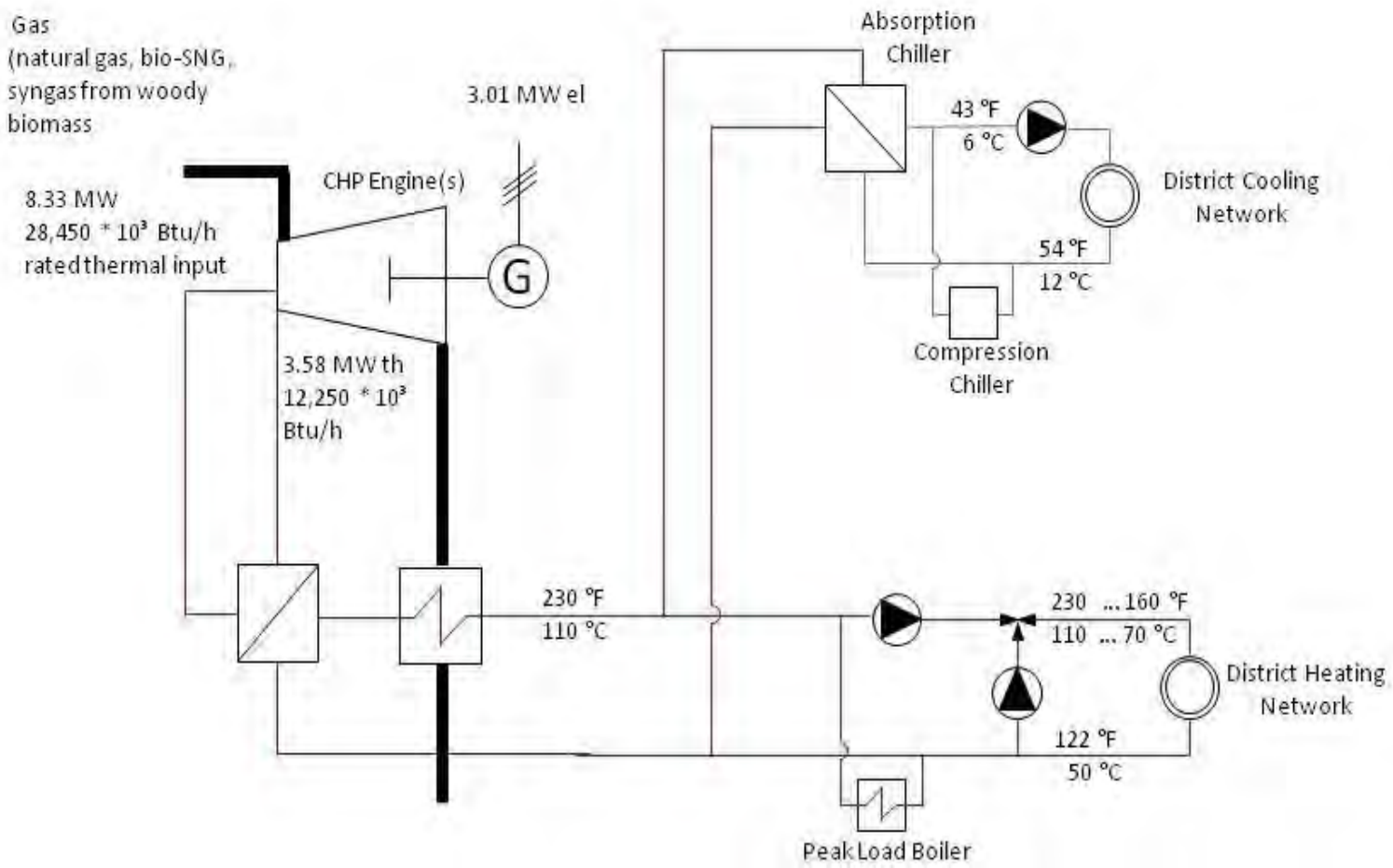

Alternative # 3: Large Wood Chip Boiler

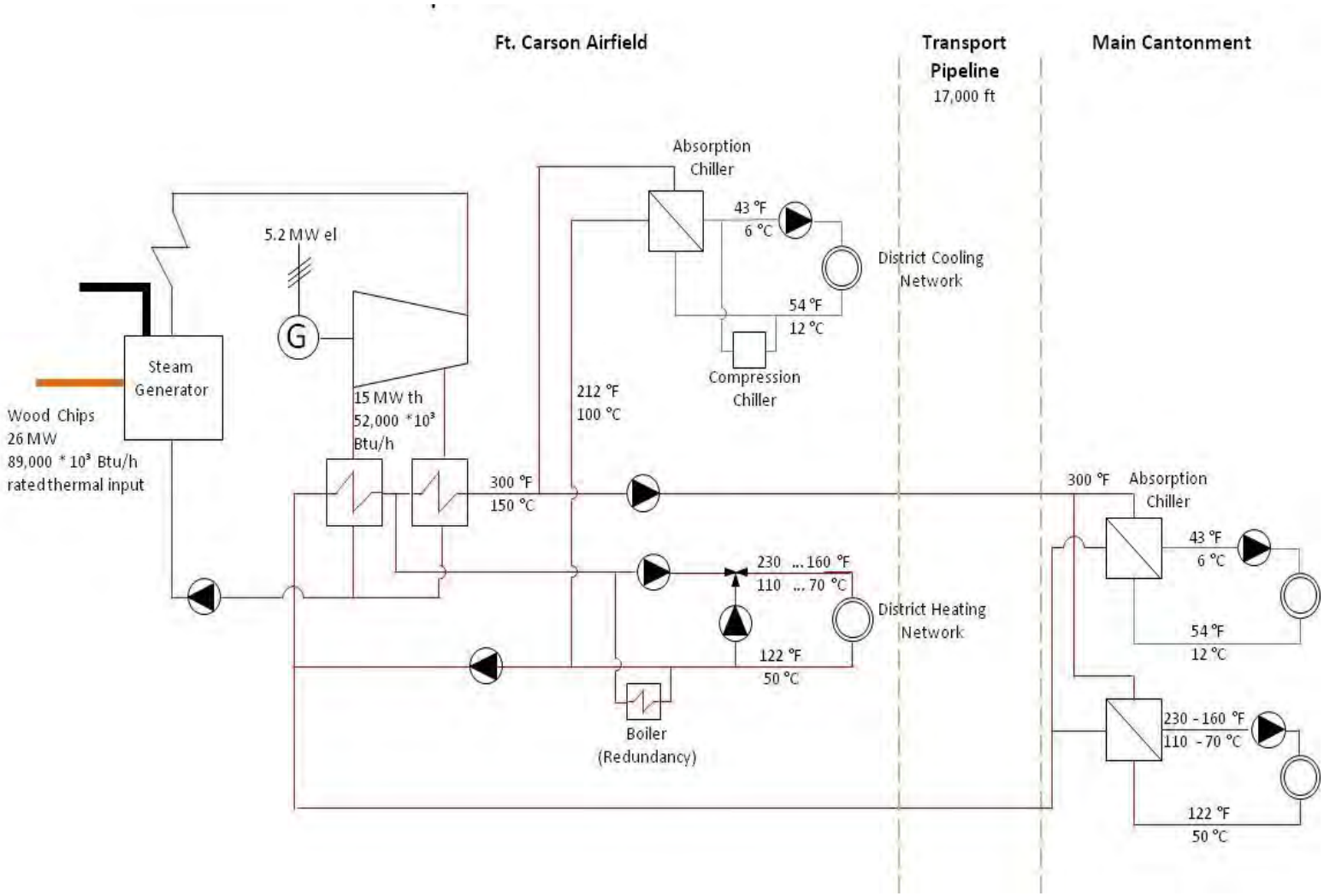

Alternative # 4 Medium Size Wood Chip Boiler

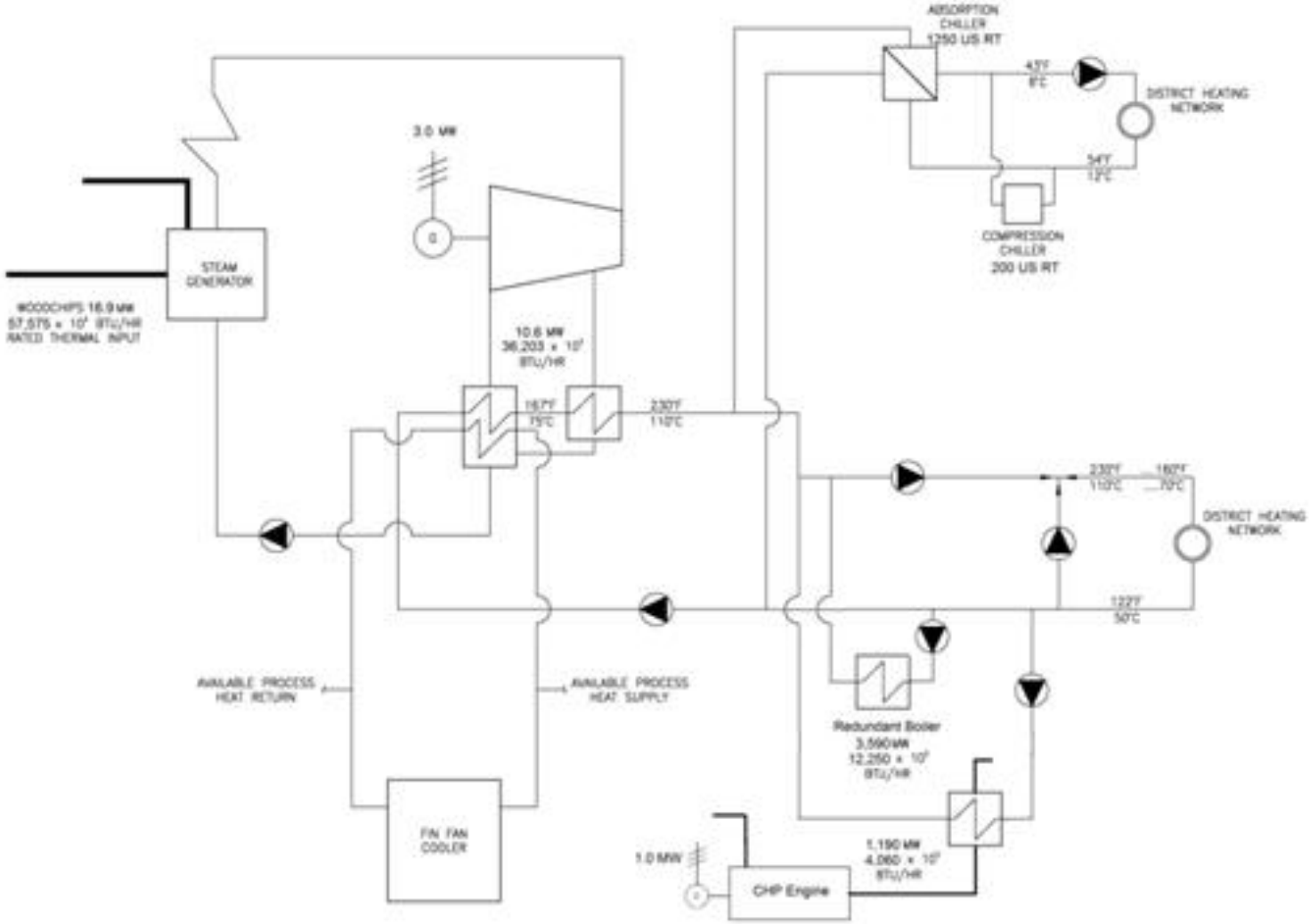

Life Cycle Cost Comparisons

Alternatives	First Cost [$M]	40 yr. LCC [$ M]	SIR	Simple Payback
0 - Base Case	2.3	126.3	-	-
1 - Gas Turbine	25.5	dq	-	-
2 - CHP Engines	25.4	99.2	2.35	12
3 - Large Wood Chip Boiler	77.4	dq	-	-
4 - Medium Wood Chip Boiler	43.9	141.1	0.57	-

Annual Energy Consumption Comparison

Alternatives	Electric Site [MWhr]	Nat Gas Site [MWhr]	Total Site [MWhr]	% Savings Site	Total Source Fuel [MWhr]	% Savings Source
Base Case	37,960	32,166	70,126		160,561	
CHP Engines	0	67,222	67,222	4%	70,583	56%

Source Savings 56% beyond EPAct Base Case!

Energy Use Reduction
Base case vs. CHP engines

- Site energy use reduction due to improved energy efficiency in new construction projects and CEP

- Source fossil fuel based energy reduction with CEP connected to natural gas

- Becomes Net Zero Energy with CEP connected to SynGas

Fort Carson Central Energy Plant

Not Business as Usual…
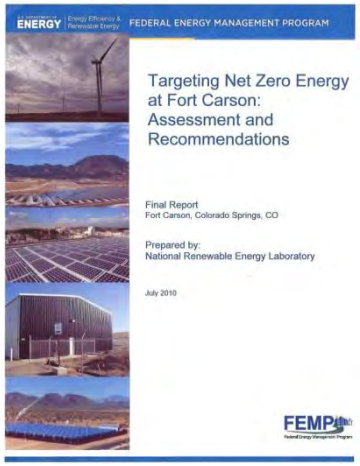
- 40% below ASHRAE baseline - not - 20% below baseline
- Central energy plant - not - standalone boilers/chillers in each bldg.
- Facilities sharing energy loads - not - independent systems
- MILCON funds from each project to support temp. energy plant in fy12 - not - separate and distinct funding
- *Teamwork* including Corps district and labs, - not - installation by itself
- Deviate from 'std. facility designs' when a more efficient energy solution can be obtained - not - strictly apply 'standard